Cordless blower 18V

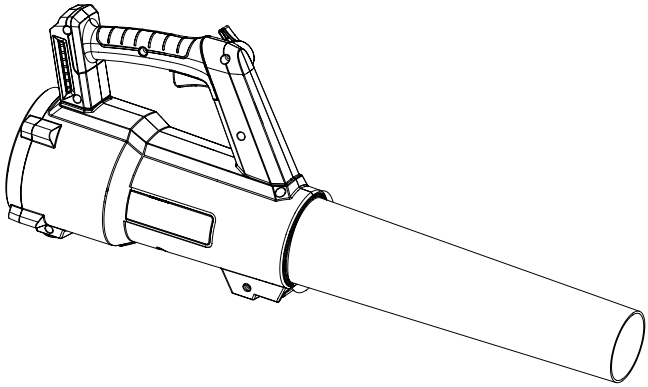

MBV18-Li-2

EN

CAUTION: Read the instructions before using the product.

Original Instructions_YAT_MAC_MNL_18V Blower_BXIM220_MBV18-Li-2_GB-V01

EN

Let's **get started...**

These instructions are for your safety. Please read through them thoroughly before use and retain them for future reference.

Getting **started...** 02

Safety information 03
Your **product** 17
Before you **start** 18

In more **detail...** 20

Product functions 21
Operation 22
Care and **maintenance** 24
Trouble shooting 27
Recycling and **disposal** 28
Guarantee 29
Customer Care and **Technical Helpline** 31
Availability of **Spare Parts** 32
Technical specifications 33
Declaration of conformity 35

Safety warnings

General power tool safety warnings

WARNING! Read all safety warnings, instructions, illustrations and specifications provided with this power tool. *Failure to follow all instructions listed below may result in electric shock, fire and/or serious injury.*
Save all warnings and instructions for future reference.
The term "power tool" in the warnings refers to your mains-operated (corded) power tool or battery-operated (cordless) power tool.

Work area safety

1. **Keep work area clean and well lit.** *Cluttered or dark areas invite accidents.*
2. **Do not operate power tools in explosive atmospheres, such as in the presence of flammable liquids, gases or dust.** *Power tools create sparks which may ignite the dust or fumes.*
3. **Keep children and bystanders away while operating a power tool.** *Distractions can cause you to lose control.*

Electrical safety

1. **Power tool plugs must match the outlet. Never modify the plug in any way. Do not use any adapter plugs with earthed (grounded) power**

tools. *Unmodified plugs and matching outlets will reduce risk of electric shock.*

2. **Avoid body contact with earthed or grounded surfaces, such as pipes, radiators, ranges and refrigerators.** *There is an increased risk of electric shock if your body is earthed or grounded.*
3. **Do not expose power tools to rain or wet conditions.** *Water entering a power tool will increase the risk of electric shock.*
4. **Do not abuse the cord. Never use the cord for carrying, pulling or unplugging the power tool. Keep cord away from heat, oil, sharp edges or moving parts.** *Damaged or entangled cords increase the risk of electric shock.*
5. **When operating a power tool outdoors, use an extension cord suitable for outdoor use.** *Use of a cord suitable for outdoor use reduces the risk of electric shock.*
6. **If operating a power tool in a damp location is unavoidable, use a residual current device (RCD) protected supply.** *Use of an RCD reduces the risk of electric shock.*

Personal safety

1. **Stay alert, watch what you are doing and use common sense when operating a power tool. Do not use a power tool while you are tired or under the influence of drugs, alcohol or medication.** *A moment of inattention while operating power tools may result in serious personal injury.*
2. **Use personal protective equipment. Always wear**

eye protection. *Protective equipment such as dust mask, non-skid safety shoes, hard hat, or hearing protection used for appropriate conditions will reduce personal injuries.*

3. **Prevent unintentional starting. Ensure the switch is in the off-position before connecting to power source and/or battery pack, picking up or carrying the tool.** *Carrying power tools with your finger on the switch or energising power tools that have the switch on invites accidents.*
4. **Remove any adjusting key or wrench before turning the power tool on.** *A wrench or a key left attached to a rotating part of the power tool may result in personal injury.*
5. **Do not overreach. Keep proper footing and balance at all times.** *This enables better control of the power tool in unexpected situations.*
6. **Dress properly. Do not wear loose clothing or jewellery. Keep your hair, clothing and gloves away from moving parts.** *Loose clothes, jewellery or long hair can be caught in moving parts.*
7. **If devices are provided for the connection of dust extraction and collection facilities, ensure these are connected and properly used.** *Use of dust collection can reduce dust-related hazards.*
8. **Do not let familiarity gained from frequent use of tools allow you to become complacent and ignore tool safety principles.** *A careless action can cause severe injury within a fraction of a second.*

Power tool use and care

1. **Do not force the power tool. Use the correct power tool for your application.** *The correct power tool will do the job better and safer at the rate for which it was designed.*
2. **Do not use the power tool if the switch does not turn it on and off.** *Any power tool that cannot be controlled with the switch is dangerous and must be repaired.*
3. **Disconnect the plug from the power source and/ or remove the battery pack, if detachable, from the power tool before making any adjustments, changing accessories, or storing power tools.** *Such preventive safety measures reduce the risk of starting the power tool accidentally.*
4. **Store idle power tools out of the reach of children and do not allow persons unfamiliar with the power tool or these instructions to operate the power tool.** *Power tools are dangerous in the hands of untrained users.*
5. **Maintain power tools. Check for misalignment or binding of moving parts, breakage of parts and any other condition that may affect the power tool's operation. If damaged, have the power tool repaired before use.** *Many accidents are caused by poorly maintained power tools.*
6. **Keep cutting tools sharp and clean.** *Properly maintained cutting tools with sharp cutting edges are less likely to bind and are easier to control.*
7. **Use the power tool, accessories and tool bits etc. in accordance with these instructions, taking into account the working conditions and the work to**

be performed. *Use of the power tool for operations different from those intended could result in a hazardous situation.*

8. **Keep handles and grasping surfaces dry, clean and free from oil and grease.** *Slippery handles and grasping surfaces do not allow for safe handling and control of the tool in unexpected situations.*

Battery tool use and care

1. **Recharge only with the charger specified by the manufacturer.** *A charger that is suitable for one type of battery pack may create a risk of fire when used with another battery pack.*
2. **Use power tools only with specifically designated battery packs.** *Use of any other battery packs may create a risk of injury and fire.*
3. **When battery pack is not in use, keep it away from other metal objects, like paper clips, coins, keys, nails, screws or other small metal objects that can make a connection from one terminal to another.** *Shorting the battery terminals together may cause burns or a fire.*
4. **Under abusive conditions, liquid may be ejected from the battery; avoid contact. If contact accidentally occurs, flush with water. If liquid contacts eyes, additionally seek medical help.** *Liquid ejected from the battery may cause irritation or burns.*
5. **Do not use battery pack or tool that is damaged or modified.** *Damaged or modified batteries may exhibit unpredictable behaviour resulting in fire,*

explosion or risk of injury.

6. **Do not expose a battery pack or tool to fire or excessive temperature.** *Exposure to fire or temperature above 130 °C may cause explosion.*
7. **Follow all charging instructions and do not charge the battery pack or tool outside the temperature range specified in the instructions.** *Charging improperly or at temperatures outside the specified range may damage the battery and increase the risk of fire.*

Service

1. **Have your power tools serviced by a qualified repair person using only identical replacement parts.** *This will ensure that safety of the power tool is maintained.*
2. **Never service damaged battery packs.** *Service of battery packs should only be performed by the manufacturer or authorized service providers.*

Safety instructions for garden blower

Training

1. Read the instructions carefully. Be familiar with the controls and the proper use of the product.
2. Never allow children, persons with reduced physical, sensory or mental capabilities or lack of experience and knowledge or people unfamiliar with these instructions to use the product. Local regulations may restrict the age of the operator.
3. Never operate the machine while people, especially children, or pets are nearby.

4. Keep in mind that the operator or user is responsible for accidents or hazards occurring to other people or their property.

Preparation

1. Obtain ear protection and safety glasses. Wear them at all times while operating the machine.
2. While operating the machine always wear substantial footwear and long trousers. Do not operate the machine when barefoot or wearing open sandals. Avoid wearing clothing that is loose fitting or that has hanging cords or ties.
3. To prevent dust irritation the wearing of a face mask is recommended.
4. Do not wear loose clothing or jewellery that can be drawn into the air inlet. Keep long hair away from the air inlets.
5. Operate the machine in a recommended position and only on a firm, level surface.
6. Do not operate the machine on a paved or gravel surface where ejected material could cause injury.
7. Before using, always visually inspect to see, that the bolts and other fasteners are secure, the housing is undamaged and that guards and screens are in place. Replace worn or damaged components in sets to preserve balance. Replace damaged or unreadable labels.
8. **CAUTION!** Do not touch a rotating impelling fan.

Operation

1. Do not allow hands or any other part of the body or

clothing inside the feeding chamber, discharge chute, or near any moving part.

2. Keep proper balance and footing at all times. Do not overreach.
3. Always stand clear of the discharge zone when operating this machine.
4. Never operate the product with defective guards or shields, or without safety devices.
5. Keep the power source clean of debris and other accumulations to prevent damage to the power source or possible fire.
6. Do not transport this product while the power source is running.
7. Stop the product and remove the battery pack. Make sure that all moving parts have come to a complete stop
   - whenever you leave the machine,
   - before clearing blockages or unclogging chute,
   - before checking, cleaning or working on the product,
   - if the machine starts to vibrate abnormally, for immediately check.
8. Do not tilt the product while the power source is running.
9. Walk, never run.
10. Never operate the product near open windows, etc.
11. Operate the product only in daylight or in good artificial light.
12. Do not blow hard objects such as nails, bolts, or rocks.
13. Apply extra care when cleaning debris from stairs or

other tight areas.

14. Follow below recommendations when using the product:
    - Use rakes and brooms to loosen debris before blowing;
    - Use the full blower nozzle extension.

Maintenance and storage

1. Disconnect the product from the power supply (i.e. remove the battery pack) before checking, cleaning or working on the product and when it is not in use.
2. Disconnect the product from the power supply (i.e. remove the battery pack) before carrying out maintenance or cleaning work.
3. Improper maintenance will lead to malfunction/failure of the product.
4. Inspect and maintain the product regularly. Keep all nuts, bolts and screws tight to be sure the product is in safe working condition.
5. Always allow the product to cool before storing.
6. When servicing the blades be aware that, even though the power source is switched off, the blades can still be moved.
7. Replace worn or damaged parts for safety. Use only genuine replacement parts and accessories.
8. Have the product repaired only by an authorised service centre or similar qualified specialist.
9. When not in use, store the product in a dry place out of the reach of children.

Additional safety warnings for battery pack

1. **Battery pack needs to be charged before use.** *Always refer to the charger's instruction and charge it properly.*
2. **Remove the battery pack from the product when not in use.**
3. **Don't maintain the battery pack on the charger when not in use.**
4. **After extended periods of storage, it may be necessary to charge and discharge the battery pack several times to obtain the maximum performance.**
5. **Longer life and better performance can be obtained if the battery is charged when the air temperature is between 18°C and 24°C.** *Do not charge the battery in air temperature below 5°C or above 40°C. This is important as it can prevent serious damage to the battery.*
6. **Do not charge battery in a damp or wet location.** *Following this rule will reduce the risk of electric shock.*
7. **Do not disassemble the battery and avoid mechanical damage to the battery. Risk of short circuit and fumes may be emitted.** *Ensure fresh air and seek medical assistance in the event of discomfort.*
8. **When disposing of battery pack, keep the battery pack of different electrochemical systems separate from each other.**

Vibration and noise reduction

To reduce the impact of noise and vibration

emission, limit the time of operation, use low-vibration and low-noise operating modes as well as wear personal protective equipment.

Take the following points into account to minimise the vibration and noise exposure risks:

1. Only use the product as intended by its design and these instructions.
2. Ensure that the product is in good condition and well maintained.
3. Use correct attachments for the product and ensure they are in good condition.
4. Keep tight grip on the handles/grip surface.
5. Maintain this product in accordance with these instructions and keep it well lubricated (where appropriate).
6. Plan your work schedule to spread any high vibration tool use across a longer period of time.
7. Prolonged use of the product exposes the user to vibrations that can cause a range of conditions collectively known as hand-arm vibration syndrome (HAVS) e.g. fingers going white; as well as specific diseases such as carpal tunnel syndrome. To reduce this risk when using the product, always wear protective gloves and keep your hands warm.

Emergency

Familiarise yourself with the use of this product by means of this instruction manual. Memorise the safety directions and follow them to the letter. This will help to prevent risks and hazards.

1. **Always be alert when using this product, so that**

you can recognise and handle risks early. *Fast intervention can prevent serious injury and damage to property.*

2. **Switch the product off and remove the battery pack if there are malfunctions.** *Have the product checked by a qualified professional and repaired, if necessary, before you operate it again.*

Residual risks

Even if you are operating this product in accordance with all the safety requirements, potential risks of injury and damage remain. The following dangers can arise in connection with the structure and design of this product:

1. Health defects resulting from vibration emission if the product is being used over long periods of time or not adequately managed and properly maintained.
2. Injuries and damage to property due to broken attachments or the sudden impact of hidden objects during use.
3. Danger of injury and property damage caused by flying objects.

⚠ **WARNING!** This product produces an electromagnetic field during operation! This field may under some circumstances interfere with active or passive medical implants! To reduce the risk of serious or fatal injury, we recommend persons with medical implants to consult their doctor and the medical implant manufacturer before operating this product!

Symbols

On the product, the rating label and within these instructions you will find among others the following symbols and abbreviations. Familiarise yourself with them to reduce hazards like personal injuries and damage to property.

V ⎓	Volt, (direct current voltage)	mAh	Milliampere per hour
/min or min^{-1}	Per minute	°C	Degree Celsius
g	Gram	kg	Kilogram
mm	Millimetre	m	Metre
cm	Centimetre	m/s²	Metres per second squared
dB(A)	Decibel (A-rated)		Lock / to tighten or secure.
	Read the instruction manual.		Unlock / to loosen.
			Note / Remark.
	Caution / Warning.		
xxWyy	Manufacturing date code; year of manufacturing (20xx) and week of manufacturing (Wyy)		
	Wear hearing protection.		
	Wear eye protection.		
	Wear a dust mask.		
	Wear face protection.		
	Wear protective gloves.		
	Wear protective, slip-resistant footwear.		
	Wear tight-fitted protective clothes.		
	Switch the product off and remove battery pack before assembly, cleaning, adjustments, maintenance, storage and transportation.		
	This product is of protection class III.		
	Do not expose the product to rain or wet conditions (moisture).		

Keep bystanders away!
Objects thrown by the product could hit the user or other bystanders. Always ensure that other people and pets remain at a safe distance from the product when it is in operation.
In general, children must not come near the area where the product is.

Danger of rotating parts. Keep hands away from blowing device! Danger of injuries.

Guaranteed sound power level value in 101 dB.

WEEE symbol. Waste electrical products should not be disposed of with household waste. Please recycle where facilities exist. Check with your Local Authority or local store for recycling advice.

Crossed out dust bin. Batteries and battery packs should not be disposed of with household waste. Please recycle where facilities exist. Check with your Local Authority or local store for recycling advice.

Do not dispose of battery packs in rivers or immerse in water.

Do not dispose of battery packs in fire. They will explode and cause injury.

Do note expose battery packs to heat in excess of 40 ºC.
Do not charge or store the battery pack in temperatures below 5 °C (41 °F) and above 40 °C (104°F).

The product complies with the applicable European directives and an evaluation method of conformity for these directives was done.

UK Conformity Assessed.

Your product

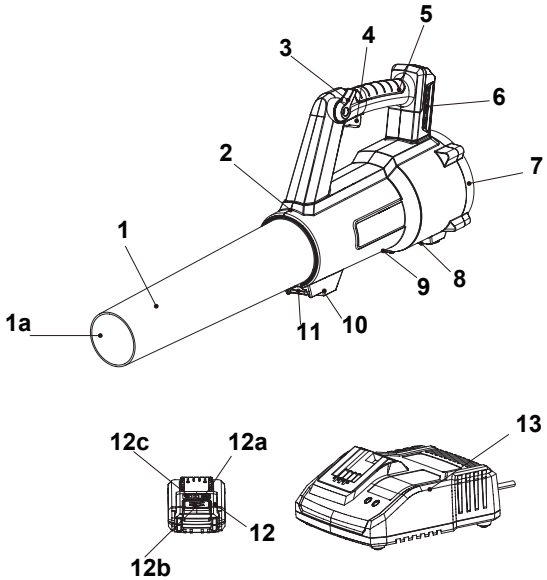

1. Air tube
   a.Nozzle
   b.Spigot*
2. Air outlet
   a.Sliding slots*
3. Locking lever
4. On/off switch
5. Handle
6. Battery docking port
7. Air inlet
8. Rear support
9. Hanging hole
10. Front support
11. Clamp lever
12. Battery pack
    a.Battery capacity button
    b.Release button
    c.Battery capacity indicators
13. Charger

NOTE: Parts marked with * are not shown in this overview. Please refer to the respective part in the instruction manual.

Unpacking

1. Unpack all parts and lay them on a flat, stable surface.
2. Remove all packing materials and shipping devices if applicable.
3. Make sure the delivery contents are complete and free of any damage. If you find that parts are missing or show damage do not use the product but contact your dealer. Using an incomplete or damaged product represents a hazard to people and property.
4. Ensure that you have all the accessories and tools needed for assembly and operation. This also includes suitable personal protective equipment.

WARNING! The product and the packaging are not children's toys! Children must not play with plastic bags, sheets and small parts! There is a danger of choking and suffocation!

You will need

(items not supplied)	(items supplied)
Suitable personal protective equipment	Battery pack (12)
Suitable hanging screw	Charger (13) and its manual

Setup

WARNING! The product must be fully assembled before operation! Do not use a product that is only partly assembled or assembled with damaged parts!
Follow the assembly instructions step-by-step and use the pictures provided as a visual guide to easily assemble the product!
Before using the product, familiarise yourself with the operating features read the entire instruction manual paying particular attention to the safety rules and operating procedures.
Do not connect the product to battery pack (12) before it is completely assembled!

Tube assembly

1. Align the spigot (1b) with the sliding slots (2a) onto the air outlet (2), then insert the air tube (1) into the air outlet (2) all the way until an audible click is heard (Fig. 1).
2. Pull the air tube (1) to verify that it is securely locked by the clamp lever (11).

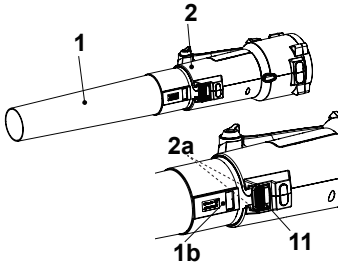

Fig. 1

Battery pack

Attaching / releasing the battery pack

1. Align the battery pack (12) with the sliding slots of the battery docking port (6) and slide the battery pack (12) in to attach it. Ensure it clicks in place (Fig. 2).
2. Press the release button (12b) and remove the battery pack (12) from the battery docking port (6) (Fig. 3).

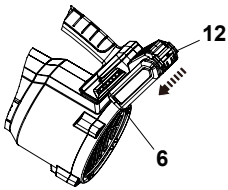

Fig. 2

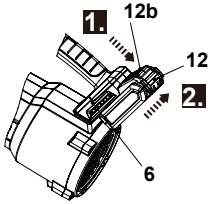

Fig.3

Charging the battery pack

The battery pack (12) for this product has been shipped in a low charge condition. Charge it fully before first use.
Refer to the charger's instruction manual (MC18) for the details.

Battery capacity indicators

The battery pack (12) is equipped with the battery capacity indicators (12c) which are used to give an indication of the battery pack's remaining capacity. Press the battery capacity button (12a) to check battery capacity (Fig. 4). The LEDs will stay lit for approximately 5 seconds.

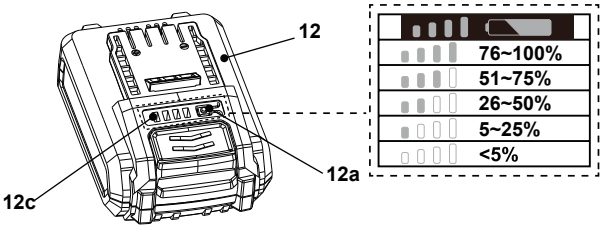

Fig. 4

In more detail...

Product functions	21
Operation	22
Care and maintenance	24
Troubleshooting	27
Recycling and disposal	28
Guarantee	29
Customer Care and Technical Helpline	31
Availability of Spare Parts	32
Technical specifications	33
Declaration of conformity	35

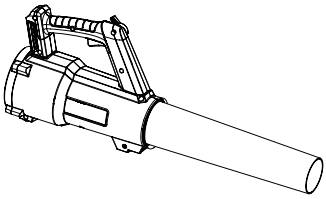

Intended use

This cordless blower MBV18-Li-2 is designated with a rated voltage of 18 V d.c. . It is designed only to be used with the battery pack which is listed in the chapter of “Technical specifications”.
The product is intended for blowing dry leaves for piling up or removing material of hard to reach places.
The product must not be used in areas where there is health damaging dust or as a wet blowing device.
The product may only be used with the blowing tube fully installed. Avoid wet materials such as leaves and dirt, twigs, branches, pine needles, grass, earth, sand, mulch, cuttings etc. Do not use on wet lawns, grassy areas or fields.
The use of this product in case of rain or humid environment is prohibited.
For safety reasons it is essential to read the entire instruction manual before first operation and to observe all the instructions therein.
This product is intended for private domestic use only, not for any commercial trade use. It must not be used for any purposes other than those described.

Switching on/off

Operate the product either in instant or continuous mode.

Instant mode

1. Hold the product with one hand on the handle (5).
2. Switch the product on by squeezing the on/off switch (4) (Fig. 5).
3. Switch the product off by releasing the on/off switch (4).

The on/off switch (4) is fitted with a built-in speed control. The air flow speed from the nozzle (1a) is controlled by how far the switch trigger is depressed.

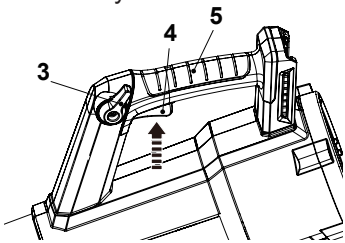

Fig. 5

NOTE: If the locking lever (3) is in the middle position, the on/off switch (4) cannot be activated by pressing action.
First turn the locking lever (3) all the way up, and then press the on/off switch (4) again.

Continuous mode

1. Hold the product with one hand on the handle (5).
2. Turn the locking lever (3) downward and the on/off switch (4) will be automatically depressed in to reach the desired flow speed (Fig. 6).
3. Release the lock lever (3) afterward and the on/off switch (4) is now locked on for continuous use.
4. Turn the locking lever (3) all the way up to switch the product off.

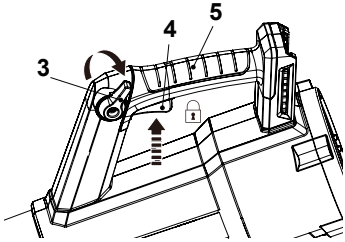

Fig. 6

General operation

1. Check the product, its battery pack and charger as well as accessories for damage before each use. Do not use the product if it is damaged or shows wear. Take care of any problem you find or have the product checked by qualified specialist.
2. Double check that the accessories and attachments are properly fixed.
3. Always hold the product on its handle (5). Keep the handles dry to ensure safe support.
4. Ensure that the air vents are always unobstructed and clear. Clean them if necessary with a soft brush. Blocked air vents may lead to overheating and damage the product.
5. Switch the product off immediately if you are disturbed while working by other people entering the working area. Always let the product come to complete stop before putting it down. Always place the product on the ground with two supports (8, 10).
6. Do not overwork yourself. Take regular breaks to ensure you can concentrate on the work and have full control over the product.
7. Before switching the product on, check whether it has been assembled correctly and all the moving parts are running smoothly!
8. We recommend slightly dampening surfaces in dusty conditions or using a mister attachment.

WARNING! In some countries regulations define at what time of the day and on what special days products are allowed to be used and what restrictions apply! Ask your community for detailed information

and observe the regulations in order to preserve a peaceful neighbourhood and avoid committing administrative offences! (statement not required for the UK)

Operating hours

Only operate the product at reasonable hours - not early in the morning, late at night or on weekends/public holidays when people might be disturbed. Inform yourself about local restrictions.

Blowing

1. Before operation, loosen leaves that are stuck to the ground using a broom or rake.
2. Make sure that the battery pack (12) is assembled before operation.
3. Ensure that no people or animals are in the work area.
4. Never point the air tube nozzle (1a) to the body.
5. Always hold the product on its handle (5).
6. Keep the air tube nozzle (1a) approximately 10 cm above the ground and walk slowly forward using a sweeping motion from side to side (Fig. 7).
7. Switch on the product by squeezing the on/off switch (4) for instant use or turn the locking lever (3) downward to lock the on/off switch (4) for continuous use.
8. While working, ensure that the product does not strike hard objects, as this can cause damage.
9. Always use product with the air tube (1) securely fixed.

Fig. 7

WARNING! Always ensure the air inlet (7) is unobstructed and clear during operation! Blocked air inlet (7) may lead to overheating and damage the product!product!

After use

1. Switch the product off, remove the battery back (12) and let it cool down.
2. Check, clean and store the product as described below.

The golden rules for care

WARNING! Always switch the product off, remove the battery pack (12) and let the product cool down before performing inspection, maintenance and cleaning work!

1. Keep the product clean. Remove debris from it after each use and before storage.
2. Regular and proper cleaning will help ensure safe use and prolong the life of the product.
3. Inspect the product before each use for worn and damaged parts. Do not operate it if you find broken and worn parts.

WARNING! Only perform repairs and maintenance work according to these instructions! All further works must be performed by a qualified specialist!

General Cleaning

1. Clean the product with a damp cloth and pH-neutral soap. Use a brush for areas that are hard to reach.
2. In particular clean the air vents (21) after every use with a cloth and brush.
3. Remove stubborn dust with high pressure air (max. 3 bar).

NOTE: Do not use chemical, alkaline, abrasive or other aggressive detergents or disinfectants to clean this product as they might be harmful to its surfaces.

4. Check for any damage and wear. Repair damages in accordance with this instruction manual or take it to an authorised service centre before using the product again.

Spare parts/Replacement parts

The following parts of this product may be replaced by the consumer. Spare

parts are available at an authorised dealer or through our customer service.

Description	Model no. or Specification
Battery pack (12)	MBAT18-2
Charger (13)	MC18

Repair

This product does not contain any parts that can be repaired by the consumer. Contact an authorised service centre or a similarly qualified person to have it checked and repaired.

Storage

1. Switch the product off and remove the battery pack.
2. Clean the product as described above.
3. Remove the air tube (1) from the main unit if necessary.

Press down the clamp lever (11) and hold it in positon, then pull out the air tube (1) from the air outlet (2) (Fig. 8).

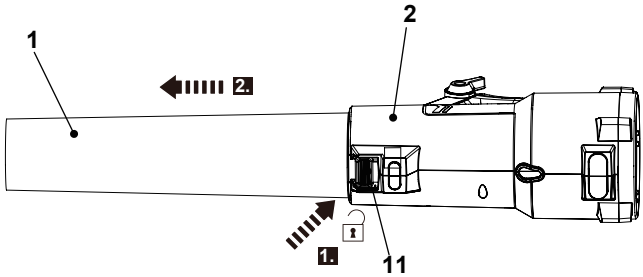

Fig. 8

4. The product has one hanging hole (9) for convenient storage.

Install a strong enough screw on the wall to bear the weight of the product, then hang the product on the wall via hanging hole (9) (Fig. 9).

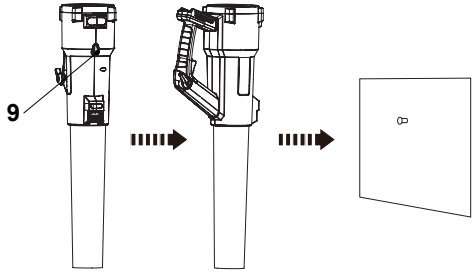

Fig. 9

1. Store the product and its accessories in a dark, dry, frost-free, well-ventilated place.
2. Always store the product in a place that is inaccessible to children. The ideal storage temperature is between 10 °C and 30 °C.
3. We recommend using the original package for storage or covering the product with a suitable cloth or enclosure to protect it against dust.
4. Charge the battery pack (12) before long-time storage.

Transportation

1. Switch the product off remove the battery pack (12).
2. Remove the air tube (1) from the main unit if necessary.
3. Always carry the product by its handle (5).
4. Protect the product from any heavy impact or strong vibrations which may occur during transportation in vehicles.
5. Secure the product to prevent it from slipping or falling over.

Troubleshooting

Suspected malfunctions are often due to causes that the users can fix themselves. Therefore check the product using this section. In most cases the problem can be solved quickly.

WARNING! Only perform the steps described within these instructions! All further inspection, maintenance and repair work must be performed by an authorised service centre or a similarly qualified specialist if you cannot solve the problem yourself!

Problem	Possible cause	Solution
1. Product does not start	1.1 Battery pack is not properly attached	1.1 Attach properly
	1.2 Battery pack is discharged	1.2 Remove and charge battery pack
	1.3 Battery pack is damaged	1.3 Check by a specialist electrician
	1.4 On/off switch (4) cannot be activated by press action	1.4 Turn the locking lever (3) all the way up, and then press the
	on/off switch (4) again	1.5 Disengage the chain brake
	1.5 Other electrical defect to the product	1.5 Check by a specialist electrician
2. Product does not reach full power	2.1 Battery pack capacity is too low	2.1 Charge battery pack
	2.2 Air vents are blocked	2.2 Clean the air vents
3.Unsatisfactory result	3.1 Nozzle not properly assembled	3.1 Refer to chapter “Tube assembly”
	4.1 Battery pack is discharged	4.1 Remove and charge battery pack
	4.2 Battery pack is too hot	4.2 Remove battery pack and let it cool down
4. Product suddenly stops	5.1 Nozzle not properly assembled	5.1 Refer to chapter “Tube assembly”
	5.2 Bolts/nuts are loosen	5.2 Tighten bolts/nuts
	4.3 Saw chain is blocked	4.3 Remove blockage
5. Excessive vibration or noise	5.1 Saw chain is dull/ damaged	5.1 Replace with a new one
	5.2 Bolts/nuts are loosen	5.2 Tighten bolts/nuts
	5.3 Chain oil is incorrect	5.3 Drain out unused oil and refill with correct oil

Recycling and disposal

Waste electrical products should not be disposed of with household waste. Please recycle where facilities exist. Check with your Local Authority or local store for recycling advice.

For further information visit www.recycle-more.co.uk.
The product comes in a package that protects it against damage during shipping. Keep the package until you are sure that all parts have been delivered and the product is working properly. Recycle the package afterwards.

Disposal of an exhausted battery pack

The battery is Li-Ion type. To preserve natural resources, please recycle or dispose of the battery pack properly. Consult your local waste authority for information regarding available recycling and / or disposal options.
Discharge your battery pack by operating your tool, then remove the battery pack from the tool and cover the battery pack connections with heavy duty adhesive tape to prevent short circuit and energy discharge.
Do not attempt to open or remove any of the components.

Guarantee

We take special care to select high quality materials and use manufacturing techniques that allow us to create products incorporating design and durability. This product has a manufacturer's guarantee of 2 years against manufacturing defects, from the date of purchase (if bought in store) or date of delivery (if bought online), at no additional cost for normal (non-professional or commercial) household use.

To make a claim under this guarantee, you must present your proof of purchase (such as a sales receipt, purchase invoice or other evidence admissible under applicable law), please keep your proof of purchase in a safe place. For this guarantee to apply, the product you purchased must be new, it will not apply to second hand or display products. Unless stated otherwise by applicable law, any replacement product issued under this guarantee will only be guaranteed until expiry of the original period guarantee period.

This guarantee covers product failures and malfunctions provided the product was used for the purpose for which it is intended and subject to installation, cleaning, care and maintenance in accordance with the information contained in these terms and conditions, in the user manual and standard practice, provided that standard practice does not conflict with the user manual.

This guarantee does not cover defects and damage caused by normal wear and tear or damage that could be the result of improper use, faulty installation or assembly, neglect, accident, misuse, or modification of the product. Unless stated otherwise by applicable law, this guarantee will not cover, in any case, ancillary costs (shipping, movement, costs of uninstalling and reinstalling, labour etc), or direct and indirect damage.

Rights under this guarantee are enforceable in the country in which you purchased this product. Guarantee related queries should be addressed to the store you purchased this product from.
The guarantee is in addition to and does not affect your statutory rights.

Manufacturer:
Kingfisher International Products Limited
3 Sheldon Square, W26PX London United Kingdom
www.kingfisher.com/products

Distributor:
B&Q plc
Chandlers Ford, Hants, SO53 3LE, United Kingdom

www.diy.com

Screwfix Direct Limited
Trade House, Mead Avenue, Yeovil, BA22 8RT, United Kingdom
www.screwfix.com

Customer Care and Technical Helpline

A better way to repair your tools
Kingfisher takes special care in creating high-quality garden power tools that are designed to last. But if a fault develops with your garden power tool and you need to claim under the guarantee, the Customer Care and Technical Helpline can support with technical assistance or if required, arrange a free courier collection from your home, assess your garden power tool for fault, repair it, and return it.
Deciding to repair your product rather than buying a replacement and adding to the mountain of waste is a more sustainable choice and you will be doing your bit for the environment.

How does it work?				
Step 1 Find your proof of purchase and get in touch with the Customer Care and Technical Helpline.	**Step 2** Chat to them about the problem with your tool.	**Step 3** They will provide technical and user advice or alternatively arrange a courier collection from your	**Step 4** The team will assess and test and if neces-sary, repair your product back to full working order.	**Step 5** Your repaired tool will be returned to you via courier within 5 working days*.

NOTE: before collection, all fuel must be removed from petrol powered machines

Get in touch
If you need help or more information, please contact the Customer Care and Technical Helpline:
UK: 0800 0789647
Eire: 1800 932226
Opening hours are Monday – Friday, 8am-5pm

Availability of Spare Parts

Contact the customer service helpline for assistance or visit www.kingfisherspares.com

For assistance contact the customer services helpline:
UK 0800 0789647 uk@Kingfisherservice.com
EIRE 1800 932226 eire@kingfisherservice.com

Further information about this product can also be found at:
www.kingfisher.com/products

Technical specifications

General

>Rated voltage	:18V ⎓
>Rated no load speed n_0	:15000 min^{-1}
>Air flow speed	:30 m/s
>Air volume	:8.1 m^3/min
>Weight	:approx. 2.2 kg
>Dimensions	:approx. 71.9*14.5*27.5 cm

Battery pack

>Model no	:MBAT18-2
>Type	:Li-Ion, 5 x 3.6 V ⎓
>Capacity	:2000 mAh
>Voltage	:18 V ⎓
>Weight	:approx. 0.39 kg

Charger for battery pack

>Model no	:MC18
>Rated output	:21.4 V ⎓, 2.4 A

Usable battery pack (sold separately) :

>Model no	:MBAT18-4	MBAT18-5	MDVB36-4
>Capacity	:4000 mAh	5000 mAh	8000 mAh

Usable charger (sold separately) :

>Model no	:MFC18	MFC36
>Rated output	:21.4 V ⎓, 4.0 A	21 V ⎓, 8.0 A

>Ambient temperature range for charger and battery use : 5°C to 40°C

Sound values

>Sound pressure level L_{pA}	:80 dB(A)
>Uncertainty K_{pA}	:3 dB(A)
>Measured sound power level L_{WA}	:98 dB(A)
>Uncertainty K_{WA}	:3 dB(A)
>Guaranteed sound power level L_{WA} (according to 2000/14/EC amended by 2005/88/EC)	:101 dB(A)

Hand arm vibration values

>Main handle a_h	:<2.5 m/s²
>Uncertainty K	:1.5 m/s^2

The sound values have been determined according to noise test code given in EN 50636-2-100 using the basic standards EN ISO 11201 and EN ISO 3744. The sound intensity level for the operator may exceed 80 dB(A) and ear

protection measures are necessary.
The declared vibration total values and the declared noise emission values have been measured in accordance with a standard test method (EN 50636-2-100) and may be used for comparing one tool with another; they may also be used in a preliminary assessment of exposure.

WARNING! The vibration and noise emissions during actual use of the power tool can differ from the declared values depending on the ways in which the tool is used especially what kind of workpiece is processed; and need to identify safety measures to protect the operator that are based on an estimation of exposure in the actual conditions of use (taking account of all parts of the operating cycle such as the times when the tool is switched off and when it is running idle in addition to the trigger time).

Rating label explanation

Blower: MBV18-Li-2
M = MAC Allister
BV = Blower
18 = Rated voltage (V)
Li = Lithium-Ion
2 = Series number
Battery pack: MBAT18-2
M = MAC Allister
BAT= Battery
18 = Battery output voltage (V)
2 = Battery capacity (Ah)
Charger: MC18
M = MAC Allister
C = Charger
18 = Battery output voltage

Declaration of conformity

(UK) DECLARATION OF CONFORMITY

Product

- Cordless Blower 18V
- MBV18-Li-2
- Type / batch or serial number range 000001 to 999999

Name and address of the manufacturer or his authorised representative:

Kingfisher International Products Limited
3 Sheldon Square
London W2 6PX
United Kingdom

This declaration of conformity is issued under the sole responsibility of the manufacturer.

Object of the declaration

Product	Model	EAN
Cordless Blower 18V	MBV18-Li-2	5059340370156

The object of the declaration described above is in conformity with the relevant legislation:

Supply of Machinery (Safety) Regulations 2008 as amended
Noise Emission in the Environment by Equipment for Use Outdoors Regulations 2001 as amended
Electromagnetic Compatibility Regulations 2016 as amended
The Restriction of the use of Certain Hazardous Substances in Electrical and Electronic Equipment Regulations 2012 as amended

Measured Sound Power Level: 98 dB(A)
Guaranteed Sound Power Level: 101 dB(A)

References to the relevant designated standards used or references to the other technical specifications in relation to which conformity is declared:

EN 60335-1:2012+A11:2014+A13:2017+A1:2019+A14:2019+A2:2019+A15:2021
EN 50636-2-100:2014
EN IEC 55014-1:2021
EN IEC 55014-2:2021
EN ISO 3744:1995

Authorised signatory and technical file holder:
Kingfisher International Products Limited
3 Sheldon Square
London W2 6PX
United Kingdom

David Awe
Group Quality Director

On [15/04/2022]

Declaration of conformity

(EN) EU DECLARATION OF CONFORMITY
(FR) DÉCLARATION UE DE CONFORMITÉ
(PL) DEKLARACJA ZGODNOŚCI UE
(RO) DECLARAȚIA DE CONFORMITATE UE
(ES) DECLARACIÓN UE DE CONFORMIDAD
(PT) DECLARAÇÃO DE CONFORMIDADE UE

Product/ Produit/ Produkt/Produsul/Producto/Produto

- Cordless Blower 18V/ Souffleur sur batterie 18V/ Dmuchawa bezprzewodowa 18V/ Suflantă fără fir 18V/ Soplador inalámbrico 18V/ Soprador sem fios 18V/ Kablosuz üfleyici 18V
- MBV18-Li-2
- Type / batch or serial number range 000001 to 999999

Name and address of the manufacturer or his authorised representative:
Nom et adresse du fabricant ou de son mandataire:
Nazwa i adres producenta lub jego upoważnionego przedstawiciela:
Denumirea și adresa producătorului sau a reprezentantului său autorizat:
Nombre y dirección del fabricante o de su representante autorizado:
Nome e endereço do fabricante ou do respetivo mandatário:

Kingfisher International Products B.V.,
Rapenburgerstraat 175E,
1011 VM Amsterdam,
The Netherlands

This declaration of conformity is issued under the sole responsibility of the manufacturer.
La présente déclaration de conformité est établie sous la seule responsabilité du fabricant.
Niniejsza deklaracja zgodności wydana zostaje na wyłączną odpowiedzialność producenta.
Prezenta declarație de conformitate este emisă pe răspunderea exclusivă a producătorului.
La presente declaración de conformidad se expide bajo la exclusiva responsabilidad del fabricante.
A presente declaração de conformidade é emitida sob a exclusiva responsabilidade do fabricante.

Object of the declaration/Objet de la declaration/Przedmiot deklaracji/Obiectul declarației/Objeto de la declaración/Objeto da declaração

Product/Produit/Produkt/Produsul/ Producto/ Produto	Model/Modèle/Model/Modelul/ Modelo/ Modelo	EAN
Cordless Blower 18V/ Souffleur sur batterie 18V/ Dmuchawa bezprzewodowa 18V/ Suflantă fără fir 18V/ Soplador inalámbrico 18V/ Soprador sem fios 18V/ Kablosuz üfleyici 18V	MBV18-Li-2	5059340370156 (UK) 5059340370217 (EU)

The object of the declaration described above is in conformity with the relevant Union harmonisation legislation:
L'objet de la déclaration décrit ci-dessus est conforme à la législation d'harmonisation de l'Union applicable:
Wymieniony powyżej przedmiot niniejszej deklaracji jest zgodny z odnośnymi wymaganiami unijnego prawodawstwa harmonizacyjnego:
Obiectul declarației descris mai sus este în conformitate cu legislația relevantă de armonizare a Uniunii:
El objeto de la declaración descrita anteriormente es conforme con la legislación de armonización pertinente de la Unión:
O objeto da declaração acima descrito está em conformidade com a legislação de harmonização da União aplicável:

Declaration of conformity

2006/42/EC as amended Machinery Directive
2014/30/EU as amended Directive Electromagnetic compatibility
2000/14/EC as amended Outdoor Noise Directive
2011/65/EU as amended Directive Restriction of the use of certain hazardous substances in electrical and electronic equipment
Directive 2006/42/CE relative aux machines
2014/30 / UE telle que modifiée Directive Compatibilité électromagnétique
Directive 2000/14/CE relative aux émissions sonores extérieures
Directive 2011/65/UE relative à la limitation de l'utilisation de certaines substances dangereuses dans les équipements électriques et électroniques
2006/42/WE w zmienionej dyrektywie maszynowej
2014/30 / UE ze zmianami Dyrektywa Kompatybilność elektromagnetyczna
2000/14/WE w zmienionej dyrektywie w sprawie hałasu na zewnątrz
2011/65 / UE ze zmianami Dyrektywa Ograniczenie stosowania niektórych niebezpiecznych substancji w sprzęcie elektrycznym i elektronicznym
2006/42/CE, astfel a fost modificată Directiva privind echipamentele
2014/30/UE, astfel a fost modificată Directiva privind compatibilitatea electromagnetică
2000/14/CE, astfel a fost modificată Directiva privind zgomotul în aer liber
2011/65/UE, astfel a fost modificată Directiva privind limitarea utilizării anumitor substanțe periculoase în echipamentele electrice și electronice
Directiva sobre maquinaria modificada 2006/42/CE
2014/30/UE modificada Directiva Compatibilidad electromagnética
2000/14/CE modificada Directiva sobre ruido al aire libre
2011/65/UE modificada Directiva Restricción del uso de determinadas sustancias peligrosas en equipos eléctricos y electrónicos
2006/42/CE como diretiva de máquinas alteradas
2014/30/UE como alteração da compatibilidade eletromagnétic
2000/14/CE como diretiva de ruído exterior alterada
2011/65/UE como restrição diretiva alterada da utilização de certas substâncias perigosas em equipamentos elétricos e eletrónicos

Measured Sound Power Level	**Guaranteed Sound Power Level**
Le niveau de puissance acoustique mesuré	Le niveau de puissance acoustique garant
Zmierzony poziom mocy akustycznej	Gwarantowany poziom mocy akustycznej
Nivel de putere acustică măsurat	Nivel de putere acustică garantat
Nivel de potencia sonora medido	Nivel de potencia sonora garantizado
Nível de potência sonora medido	Nível de potência sonora garantido
: 98 dB(A)	: 101 dB(A)

References to the relevant harmonised standards used or references to the other technical specifications in relation to which conformity is declared:
Références des normes harmonisées pertinentes appliquées, y compris la date de celles-ci, ou des autres specifications techniques, y compris la date de celles-ci, par rapport auxquelles la conformité est déclarée:
Odwołania do odnośnych norm zharmonizowanych, które zastosowano, wraz z datą normy, lub do innych specyfikacji technicznych, wraz z datą specyfikacji, w odniesieniu do których deklarowana jest zgodność:
Trimiteri la standardele armonizate relevante folosite, inclusiv data standardului, sau trimiteri la celelalte specificații tehnice, inclusiv data specificațiilor, în legătură cu care se declară conformitatea:
Referencias a las normas armonizadas pertinentes utilizadas, incluidas las fechas de las normas, o referencias a las otras especificaciones técnicas, incluidas las fechas de las especificaciones, respecto a las cuales se declara la conformidad:
Referências às normas harmonizadas aplicáveis utilizadas, incluindo a data da norma, ou às outras especificações técnicas, incluindo a data da especificação, em relação às quais é declarada a conformidade:

EN 60335-1:2012+A11:2014+A13:2017+A1:2019+A14:2019+A2:2019+A15:2021
EN 50636-2-100:2014
EN IEC 55014-1:2021
EN IEC 55014-2:2021
EN ISO 3744:1995

Declaration of conformity

Authorised signatory and technical file holder/signataire et responsable de la documentation technique authorisé/ podmiot uprawniony do wystawienia i adres prezechowywania dokumentacji technicznej/semnatar autorizat și deținător al dosarului tehnic/firmante autorizado y titular del expediente tecnico/ signatário autorizado e detentor da ficha técnica

Kingfisher International Products B.V.,
Rapenburgerstraat 175E,
1011 VM Amsterdam,
The Netherlands

David Awe
Group Quality Director : [15/04/2022]

Manufacturer,Fabricant,Producent,Producător,Fabricante:

UK Manufacturer:
Kingfisher International Products Limited
3 Sheldon Square, London, W2 6PX
United Kingdom
www.kingfisher.com/products

EU Manufacturer:
Kingfisher International Products B.V.
Rapenburgerstraat 175E
1011 VM Amsterdam
The Netherlands
www.kingfisher.com/products

EN	www.diy.com www.screwfix.com www.screwfix.ie	To view instruction manuals online, visit www.kingfisher.com/products
FR	www.castorama.fr www.bricodepot.fr	Pour consulter les manuels d'instructions en ligne, rendez-vous sur le site www.kingfisher.com/products
PL	www.castorama.pl	Aby zapoznać się z instrukcją obsługi online, odwiedź stronę www.kingfisher.com/products
ES	www.bricodepot.es	Para consultar los manuales de instrucciones en línea, visite www.kingfisher.com/products
PT	www.bricodepot.pt	Para consultar manuais de instruções online, visite www.kingfisher.com/products
RO	www.bricodepot.ro	Pentru a consulta manualele de instrucţiuni online, vizitaţi www.kingfisher.com/products
TR	www.koctas.com.tr	Kullanım kılavuzuna internet üzerinden ulaşmak için www.kingfisher.com/products adresini ziyaret edin